PRODUCT INFORMATION

Lean Burn DF20A/15A

SUZUKI

Way of Life!

The World's First 14.7kW (20PS)/11.0kW (15PS) Lean Burn Outboard with Battery-less Fuel Injection

Suzuki builds some of the world's most technologically advanced, fuel efficient outboards, and the new DF20A and 15A are no different. An all-new outboard for Suzuki, the DF20A fills the slot between our DF25 and DF15 with an environmentally friendly, fuel-efficient outboard we are proud of. These are the world's first outboards in the 14.7kW (20PS) and 11.0kW (15PS) class equipped with a battery-less fuel injection system that delivers quick, easy starts and clean, fuel-efficient operation. Using newly designed parts with smaller, lighter structures, allowed us to incorporate the fuel injection system into the outboard while keeping its overall weight lower than any other outboard in the four-stroke 14.7kW (20PS) class. And adding Suzuki's proven Lean Burn Control technology delivers remarkable fuel economy over the outboard's full operating range.

Features

- First outboards in the 14.7kW (20PS) and 11.0kW (15PS) class equipped with a battery-less fuel injection system.
- Lightest outboard in the four-stroke 14.7kW (20PS) class.
- Suzuki's Lean Burn Control system delivers outstanding fuel economy.
- Easy start recoil starter offers light pulling for easier, quicker starts.

New Generation Fuel Injection System

These are the first outboards in their respective classes to offer fuel injection, and the DF20A/15A development team did an incredible job fitting it into the outboard without adding unneeded bulk or weight. All new components, including the inline high-pressure fuel pump, a small fuel cooler, small vapor separator, small fuel injectors, and a new throttle body, were designed as compact as lightweight as possible. A layout was also devised allowing the entire system to fit in as little space as possible. The system operates battery-less, which is another industry first in the 14.7kW (20PS) and 11.0kW (15PS) class. Fuel injection systems normally require battery power for operation, but Suzuki' s Battery-Less system allows the system to operate without a battery so you can experience quicker starts, smoother operation, and better acceleration in all conditions.

Fuel Injector

Vapor Separator

Fuel Pump

Throttle Body

Fuel Cooler

Fuel injection system (Electric Start Model)

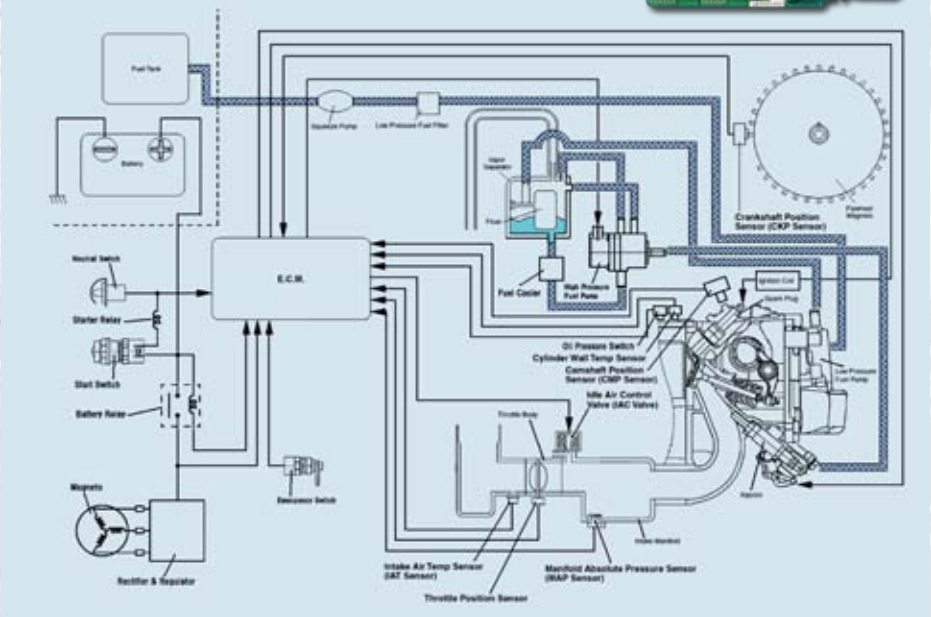

Light Weight & Compact

To create as light and compact an outboard as possible, our DF20A/15A development team focused heavily on reducing the size and weight of each part and component, looking to create the smallest, lightest parts possible without compromising their integrity. Their success delivered an outboard that is the lightest in the 4-stroke 14.7kW(20PS) class-about 5% lighter than the closest competitor.

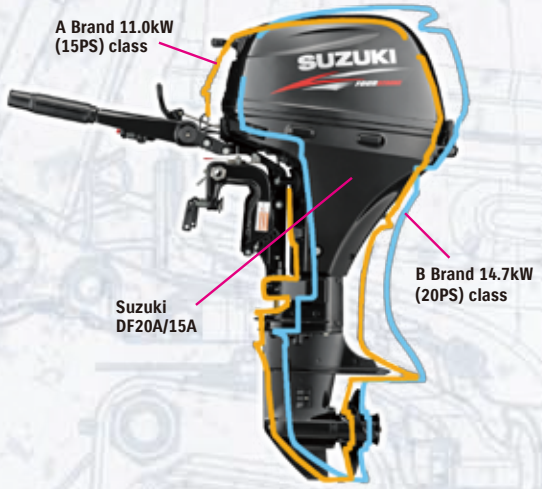

Superior Fuel Economy – Suzuki's Lean Burn Control System

First introduced on our DF90/80/70, the Suzuki Lean Burn system is an intelligent system that monitors engine performance and operating conditions to predict fuel needs and deliver a leaner fuel mixture to the engine. The system delivers remarkable improvements in fuel economy over the engine's entire operating range. This system is found on most outboards in our lineup from the DF40 up, providing boaters with top-level fuel economy at all operating speeds.

LEAN BURN

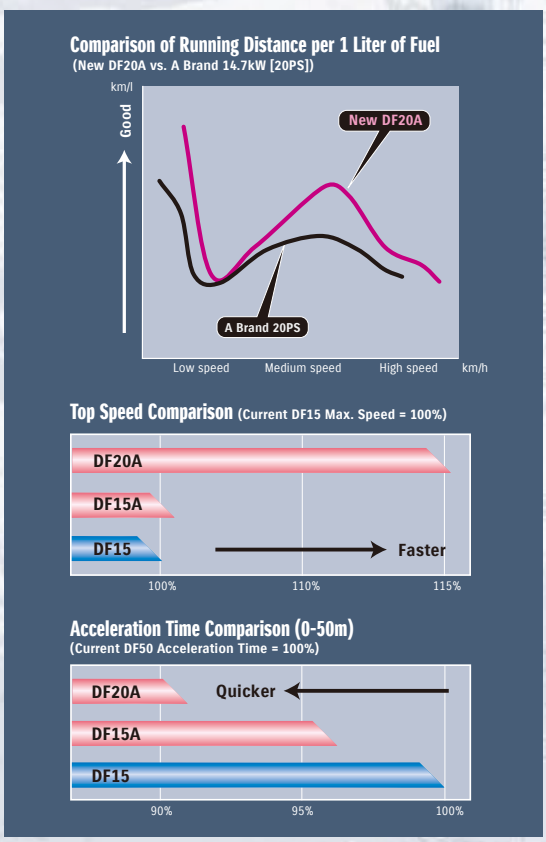

Data used in the graphs were obtained through in-house testing under uniformed conditions. Results will vary depending upon operating conditions (boat design, size, weight, weather, etc.)

Easy to Use

In addition to better fuel economy, the fuel injection system makes starting the outboard easier and more dependable in nearly any operating condition or environment. And compared to carbureted models, fuel injection helps to reduce engine vibration making the outboard run smoother.

Easy Start Recoil Starter

While fuel injection makes starts easy, the DF20A/15A development team designed a starter with a very light recoil load that requires less pull strength. Requiring much less effort to pull the starter makes starts exceptionally easy for almost everyone.

Suzuki's Anti Corrosion System

Suzuki protects the outboard's exterior from harmful corrosion with its own specially formulated anti-corrosion finish. Applying the finish directly to the outboard's aluminum surface, allows maximum bonding of the finish to the surface to increase durability and help protect parts that are constantly exposed to saltwater.

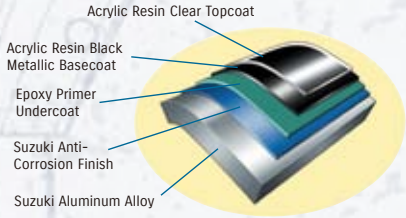

Cleaner, Efficient Operation

Suzuki's advanced four-stroke technology delivers clean and efficient outboard operation that conforms to the Recreational Craft Directive (RCD) - Directive 2003/44/EC of the European Parliament and of the Council, and have received three-star ratings from the California Air Resources Board (CARB).

RCD EMISSIONS STANDARDS EU

ULTRA-LOW EMISSION

A word from Suzuki engineers

Hideto Nakamura (Development and Design Group)

In charge of engine design and overall design coordinator.
Suzuki Employee for 16 years.

Career in company: PWC engine development, snowmobile engine development, outboard engine design
I worked on development and design of the outboard motor with a focus on reducing the total weight of the outboard engine.
When we were developing the outboard, we wanted to reduce weight so we looked not only at the large parts, but at the smallest of parts, component shapes, processes, even the materials as well. We also used combustion and flow analysis extensively to determine the optimum shape of each part so as to obtain the desired power output from the engine.
The new DF20A/15A is extremely lightweight and produces power output from low rpm. I'm very satisfied with the results.

Yukihiro Yoshikawa (Development and Design Group)

In charge of the design of electronics.
Suzuki Employee for 15 years.

Since the DF20A/15A is the smallest horsepower outboard to be equipped with fuel-injection, it was a challenge obtaining the same level of performance found in larger outboards while reducing the size of the parts.
In regard to the ECM (Engine Control Module), we designed it to operate without a battery, and incorporated a variety of devices to improve fuel efficiency so you can fully enjoy the benefits of fuel injection.

Akinori Yamazaki (Experiment Group)

In charge of experimental development.
Suzuki Employee for 8 years.

When developing the DF20A/15A, we focused on the benefits of a battery- free fuel injection system. Compared to an analog-type carburetor, a number of engine functions can be controlled electronically, startup performance is not influenced by the operating environment, idle rpm is very stable, and by taking advantage of the lean burn system, it delivers superior fuel efficiency.
Compared to the simple structure of a carburetor, we completely rethought the layout of the fuel injection system, giving priority to the function of each part so that the resulting system was the same size and weight of a carburetor.

Hiromichi Takewaki (Production Design Group)

In charge of engine rigging.
Suzuki Employee for 8 years.

When we started developing the new DF20A/15A, we made a conscious decision to develop as compact and lightweight an outboard as possible.
In particular, the new fuel injection system enabled us to reduce the size of the outboard, and the use of resins allowed us to reduce its overall weight.
While incorporating fuel injection increased the number of parts compared to a carbureted system, through trial and error we could fit everything into an engine cover that is nearly the same size as the previous outboard.

DF20A/15A SPECIFICATIONS

	DF20A		DF15A	
ENGINE TYPE	4-STROKE OHC 4-VALVE			
FUEL DELIVERY SYSTEM	ELECTRONIC FUEL INJECTION			
RECOMMENDED TRANSOM HEIGHT mm (in.)	L: 508 (20), S: 381 (15)			
STARTING SYSTEM	ELECTRIC	MANUAL	ELECTRIC	MANUAL
WEIGHT kg (lbs) *with battery cable, without propeller & engine oil	L: 49 (108) S: 48 (106)	L: 45 (99) S: 44 (97)	L: 49 (108) S: 48 (106)	L: 45 (99) S: 44 (97)
NO. OF CYLINDERS	IN-LINE 2			
PISTON DISPLACEMENT cm3 (cu. In.)	327 (20.0)			
BORE X STROKE m/m (in.)	60.4 X 57 (2.38 X 2.24)			
MAXIMUM OUTPUT kW (PS)/rpm	14.7 (20)/5,800		11.0 (15)/5,500	
FULL THROTTLE OPERATING RANGE rpm	5,300-6300		5000-6000	
STEERING	Tiller			
OIL PAN CAPACITY lit. (US/Imp. qt.)	1.0 (1.06/0.88)			
IGNITION SYSTEM	DIGITAL CDI			
ALTERNATOR	ELECTRIC:12V 12A , MANUAL: 12V 6A			
ENGINE MOUNTING	SHEAR MOUNT			
TRIM METHOD	MANUAL TRIM AND TILT			
GEAR RATIO	2.08 : 1			
GEAR SHIFT	F-N-R			
EXHAUST	THROUGH PROP HUB EXHAUST			
DRIVE PROTECTION	RUBBER HUB			
PROPELLER SIZE (in.) All propellers are the 3-blade type ○:Standard ●: Optional	● 9-1/4 X 7 ○ 9-1/4 X 9 ○ 9-1/4 X 10 ● 9-1/4 X 11		● 9-1/4 X 8 (THICK) ● 9-1/4 X 9 (THICK) ● 9-1/4 X 10 (THICK)	

* With battery cable, without propeller & engine oil.

DIMENSIONS

UNIT: mm (inch)

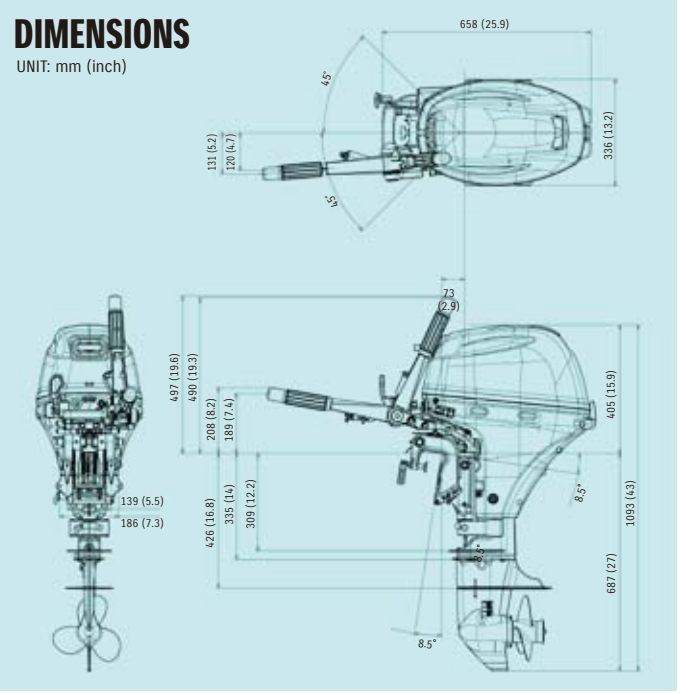

Please read your owner's manual carefully. Remember, boating and alcohol or other drugs don't mix. Always use a personal flotation device. Please operate your outboard safely and responsibly. Suzuki encourages you to operate your boat safely and with respect for the marine environment.

Specifications, appearances, equipment, colors, materials and other items of "SUZUKI" products shown on this catalogue are subject to change by manufacturers at any time without notice and they may vary depending on local conditions or requirements. Some models are not available in some territories. Each model might be discontinued without notice. Please inquire at your local dealer for details of any such changes. Actual body color might differ from the colors in this brochure.

SUZUKI
SUZUKI MOTOR CORPORATION
300 TAKATSUKA-CHO, MINAMI-KU, HAMAMATSU CITY, JAPAN 432-8611

99999-C0000-000 DF20A/15A LEAN BURN Product Information 英中 Printed in Japan 0000